UNAUTHORIZED USE OF THIS DRAWING IS STRICTLY PROHIBITED

DAR	REV	DESCRIPTION	APPVD	DATE
1360	A	INITIAL RELEASE	DG	11–07

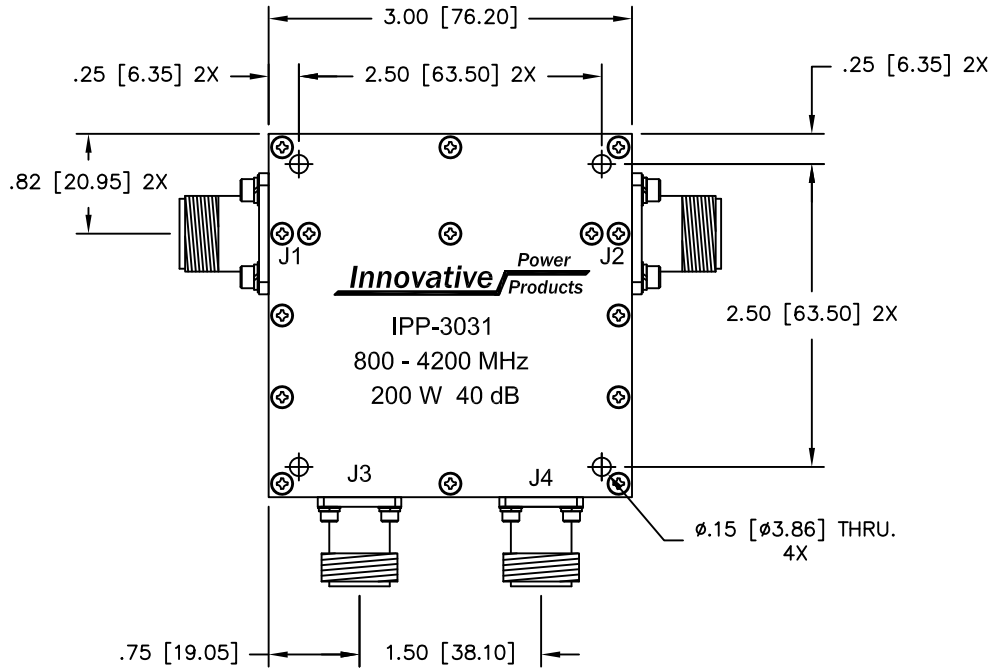

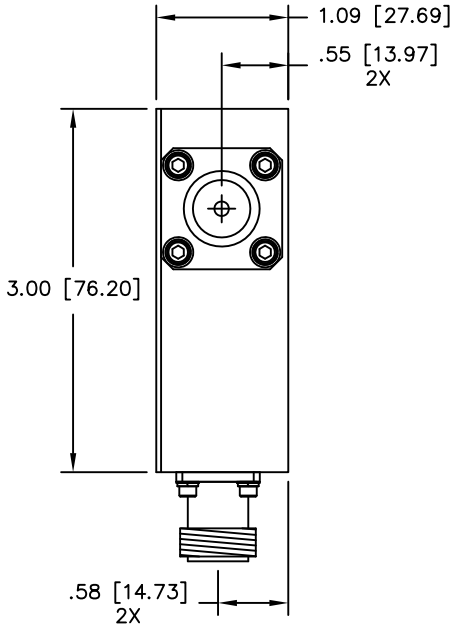

NOTES

1. CONNECTORS J1 & 2:
   TYPE N–F
   CONNECTORS J3 & 4:
   TYPE N–F

ELECTRICAL SPECIFICATIONS

FREQUENCY:	800 – 4200 MHz.
INSERTION LOSS:	0.3dB MAX.
VSWR:	1.30:1 MAX.
COUPLING:	40.0 ±1.0dB
DIRECTIVITY:	>20dB
COUPLED FLATNESS:	±0.50dB MAX.
POWER:	200 WATT

MATERIAL AL. ALLOY 6061-T651	DWN DG	DATE 11-07	Innovative Power Products
FINISH CHEM FILM CLEAR IRRIDITE	ENG TJD	DATE 11-07	TITLE OUTLINE, DUAL DIRECTIONAL COUPLER, 800 - 4200 MHz., 40dB, 200W
	MANUF TP	DATE 11-07	
	CAGE CODE: 437R2		
TOLERANCE IN [MM] .XXX ±.005 .XX ±.02 ANG. ±1/2°	SHEET 1 OF 1	SCALE 1:1	SIZE B / P/N IPP-3031 / REV. A