UNAUTHORIZED USE OF THIS DRAWING IS STRICTLY PROHIBITED

DAR	REV	DESCRIPTION	APPVD	DATE
1453	A	INITIAL RELEASE	DG	6–08

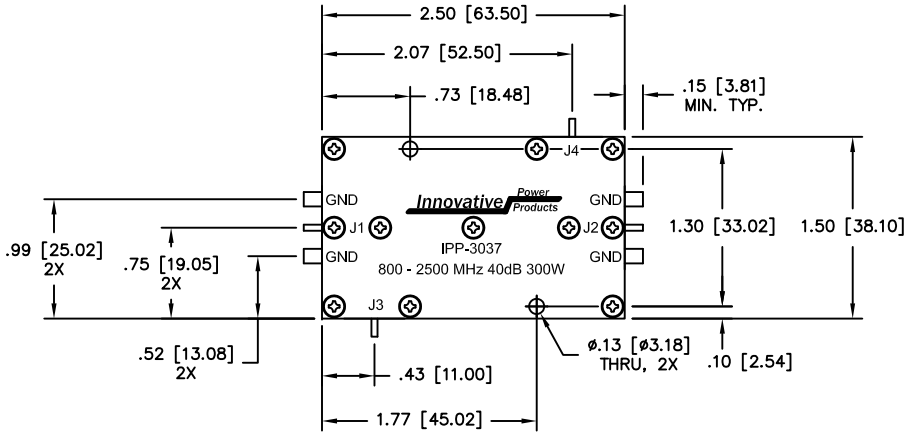

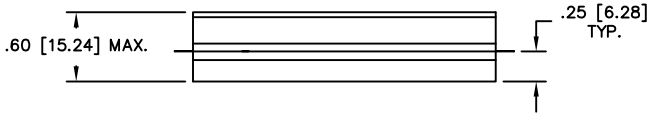

NOTES

1. J1 – J4: 0.050 X 0.005 SILVER TABS
   GND: 0.120 X 0.005 SILVER TABS

ELECTRICAL SPECIFICATIONS

FREQUENCY:	800 – 2500 MHz.
INSERTION LOSS:	<0.25dB
VSWR:	<1.25:1
COUPLING:	40.0 ±1.0dB
DIRECTIVITY:	> 18dB
COUPLED FLATNESS:	±0.50dB
POWER:	300 WATT
TEMPERATURE:	–55°C TO 85°C

MATERIAL AL. ALLOY 6061-T651	DWN DG	DATE 12-07	Innovative Power Products
FINISH CHEM FILM CLEAR IRRIDITE	ENG TJD	DATE 12-07	TITLE DUAL DIRECTIONAL COUPLER 800 - 2500 MHz. 300 WATT, 40 dB
	MANUF TP	DATE 12-07	
TOLERANCE .XX ±.02 .XXX ±.010 ANG. ±1/2°	CAGE CODE: 437R2		
	SHEET 1 OF 1	SCALE 1:1	P/N IPP-3037 REV. A